Unbound Notes and Drawings
Oversize Documents

Among the unbound technical notes and drawings for the period 1899-1910 are many oversize blueprints, linen drawings, and sketches by draftsmen and other Edison employees. Included are plans for machinery, tools, patterns, and parts, as well as several Edison products, like the Home Phonograph (1900) and the Edison-Saunders reheater for compressed air (1899).

Less than 10 percent of the documents have been selected. The six selected items consist of experimental drawings from 1900 and 1910 reflecting work at the laboratory, including experiments with phonographs and motion pictures in 1910. Most of the unselected items relate to the manufacturing processes of Edison's companies or involve unidentified laboratory work for which little context is available and for which the drawings themselves provide only fragmentary details. Also not selected are documents that are too large, brittle, or dark to reproduce legibly.

[FILMED IN SECTIONS]

1	2

[REDUCTION RATIO = 18:1]

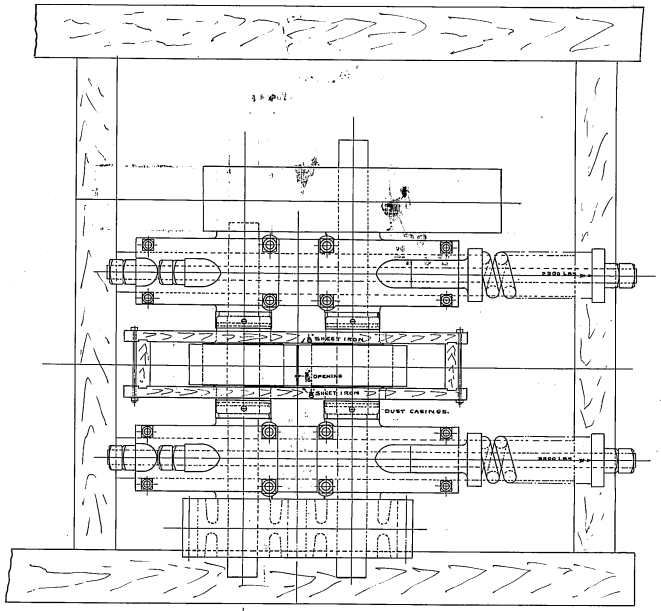

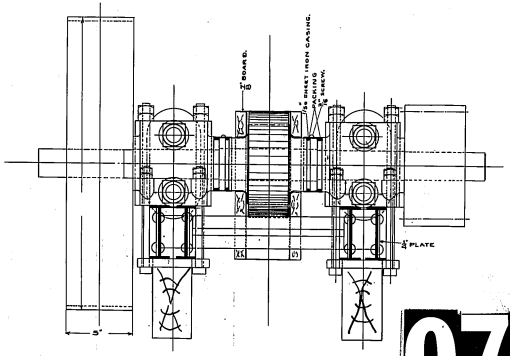

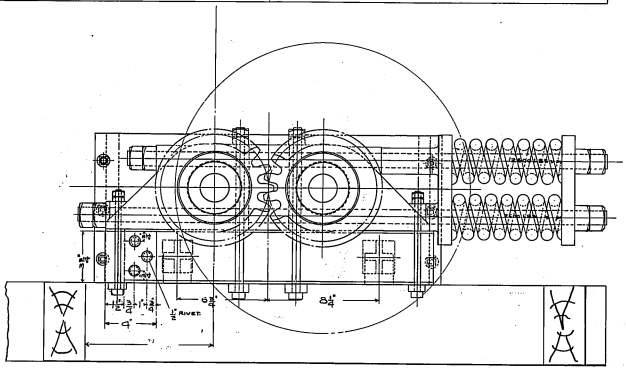

973

ORDER OR MFG.
908
-NUMBER-

[FILMED IN SECTIONS]

1	2

[REDUCTION RATIO = 18:1]

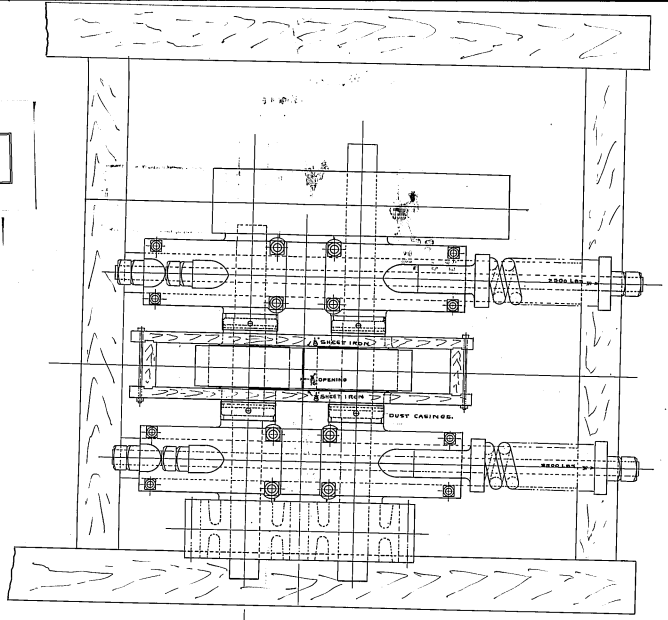

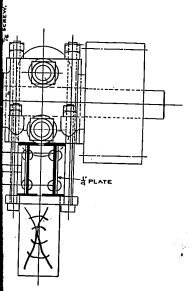

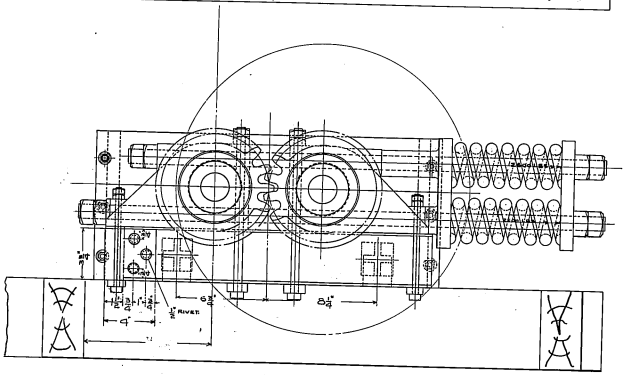

974

EDISON LABORATORY
WEST ORANGE N.J.
EXPERIMENTAL POWDERED FUEL PLANT.
CRUSHING ROLLS.
SCALE 3" = 1 FOOT
JAN. 30, 1900.
Geo. A. Fochs

2.

[FILMED IN SECTIONS]

1	2

[REDUCTION RATIO = 18:1]

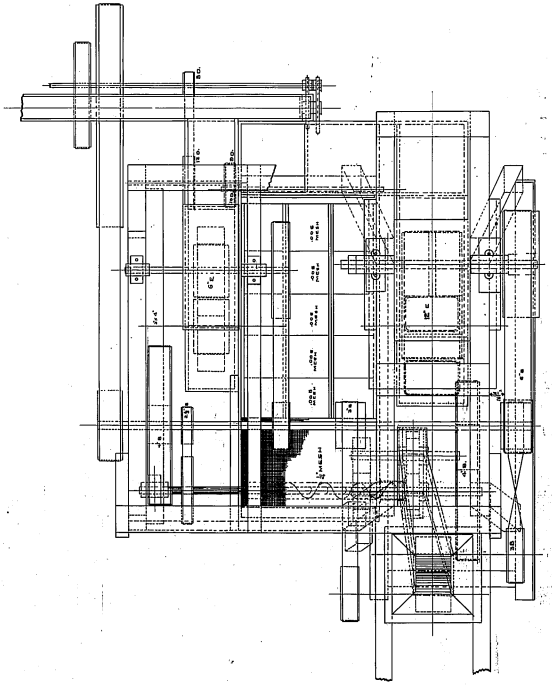

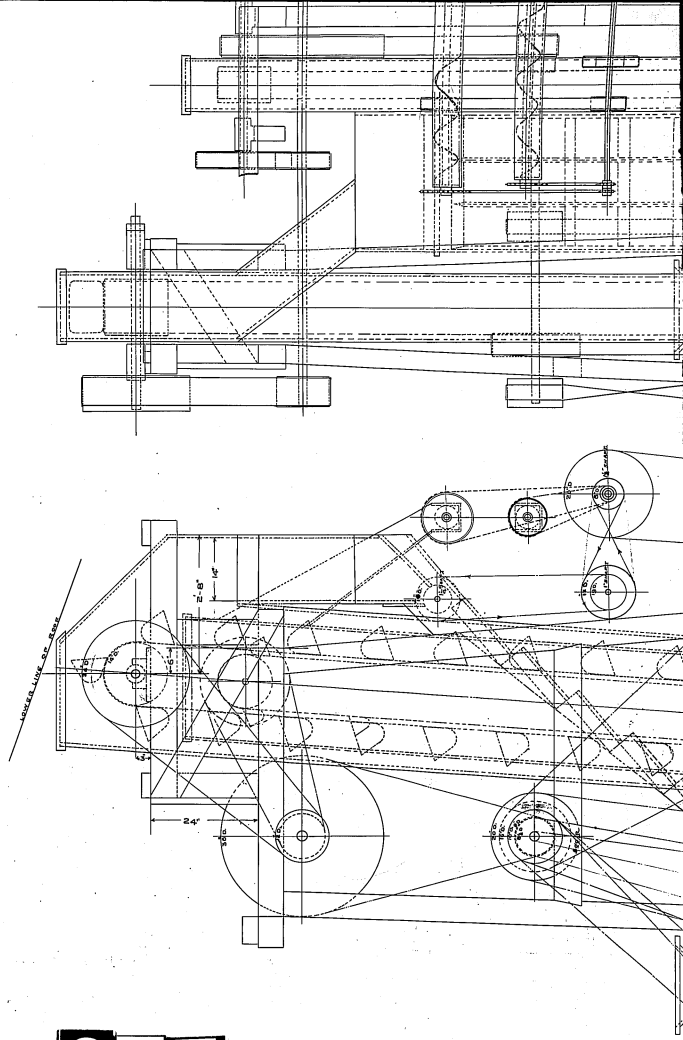

975

ORDER & MFG
9006.
NUMBER.

[FILMED IN SECTIONS]

1	2

[REDUCTION RATIO = 18:1]

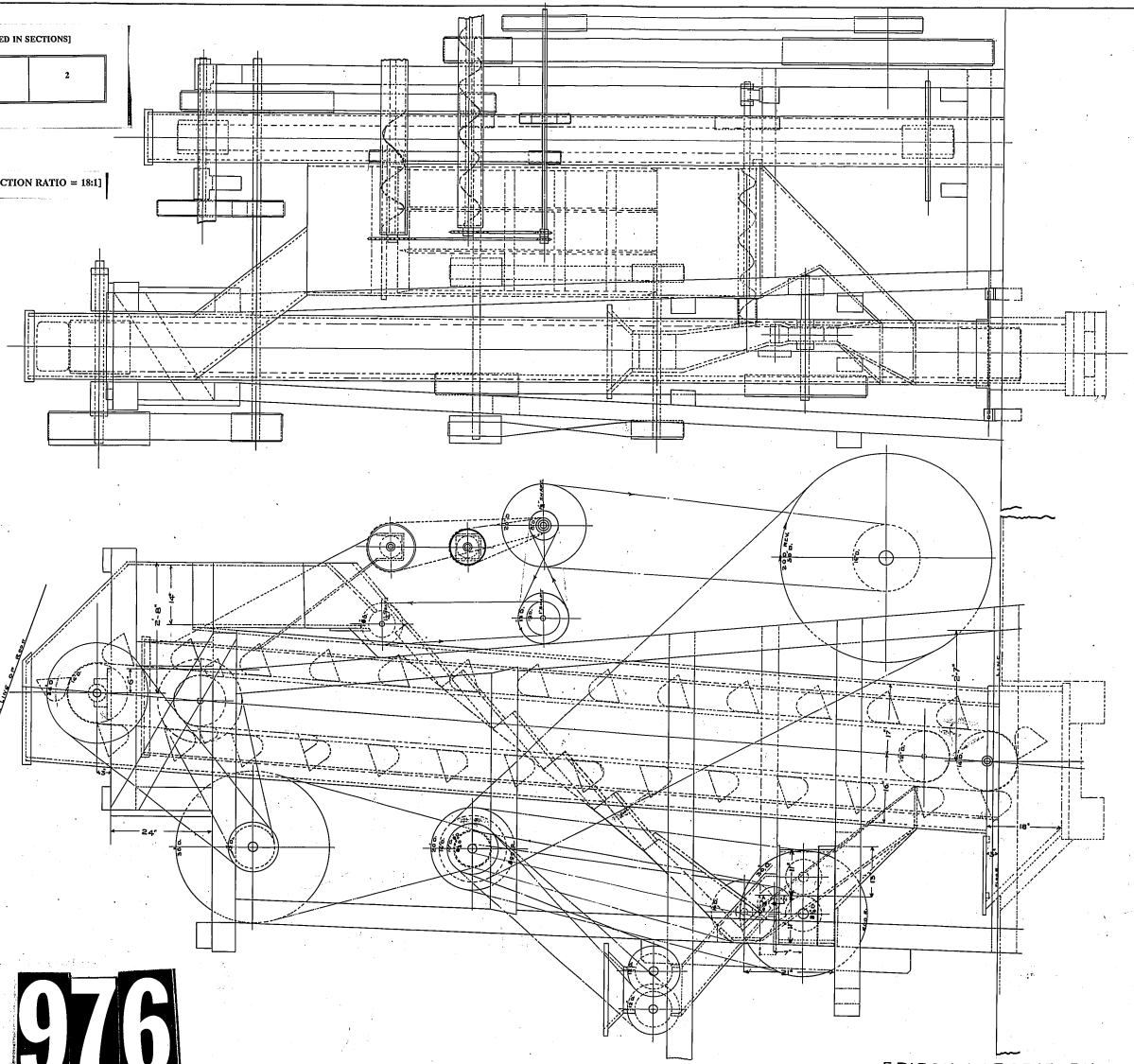

976

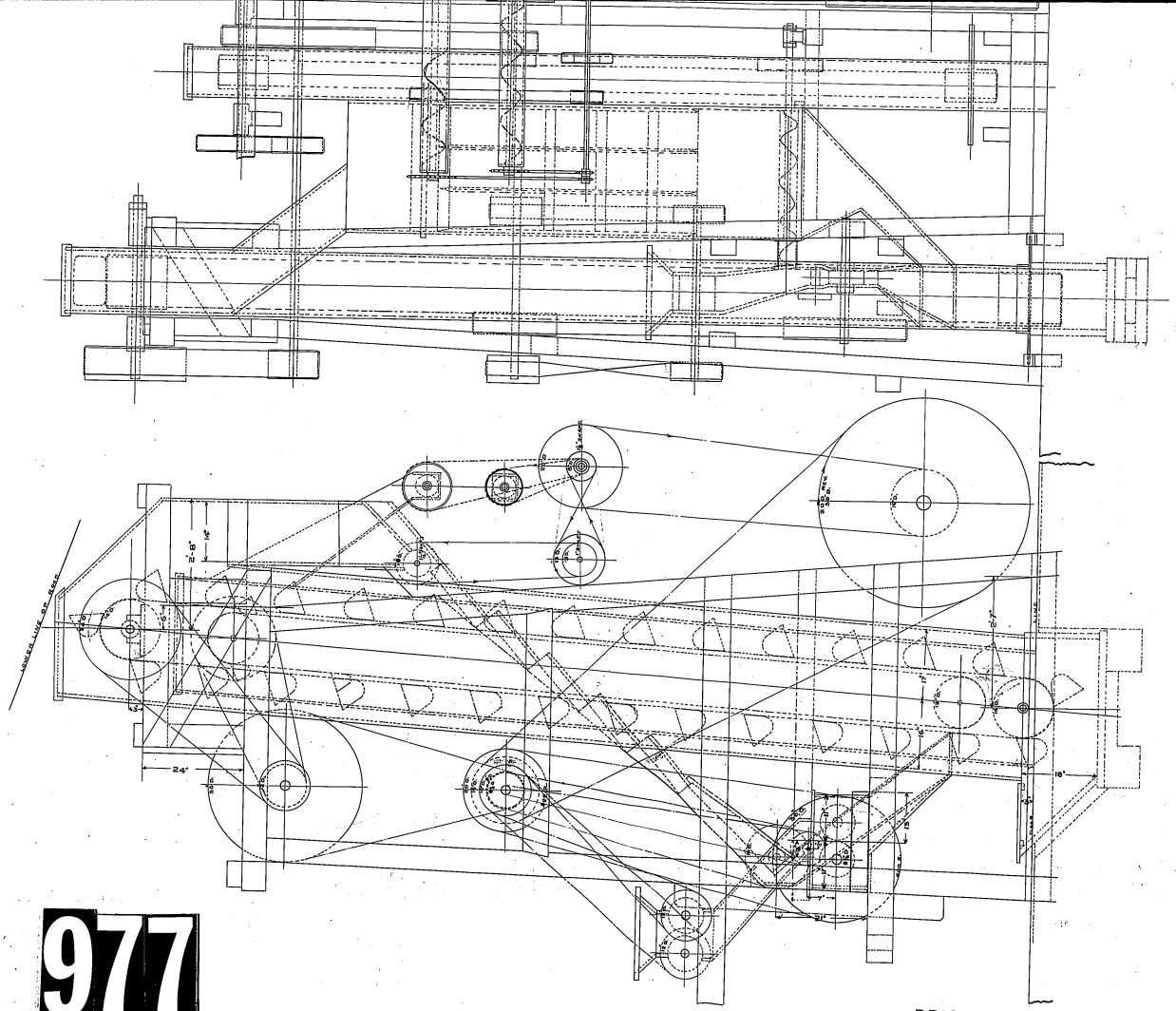

977

[REDUCTION RATIO = 18:1]

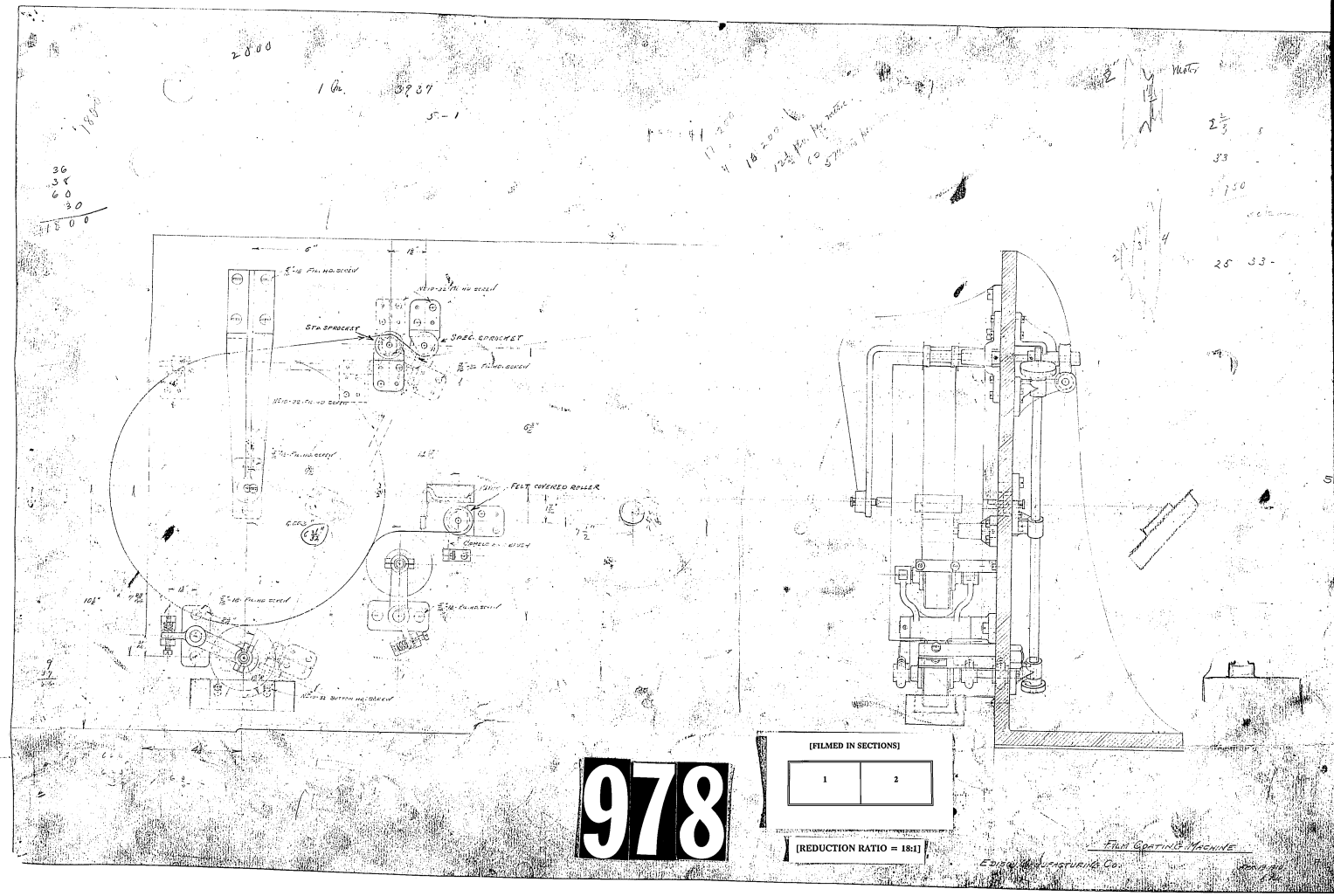

978

[FILMED IN SECTIONS]

1	2

[REDUCTION RATIO = 18:1]

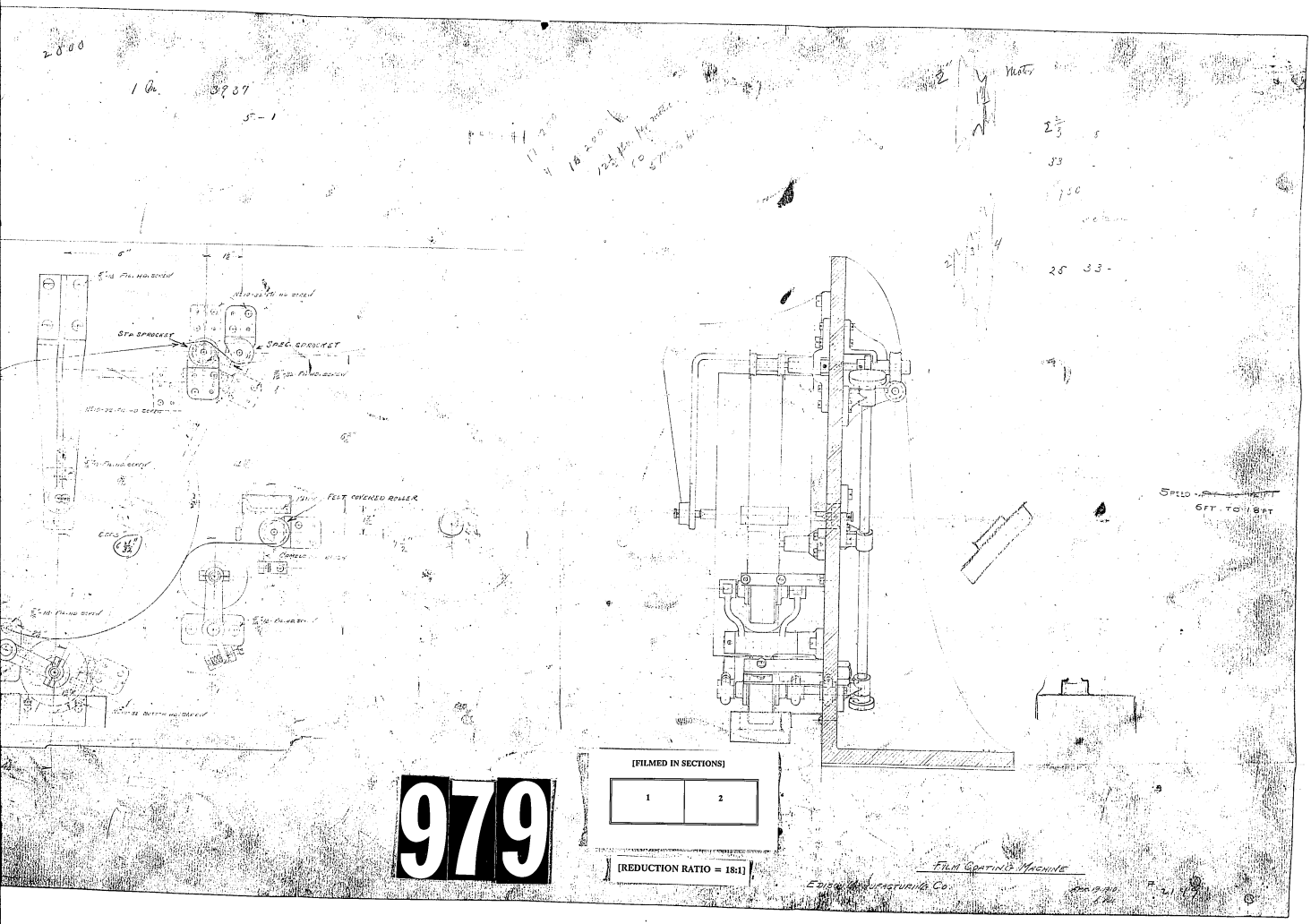

979

[FILMED IN SECTIONS]

1	2

[REDUCTION RATIO = 18:1]

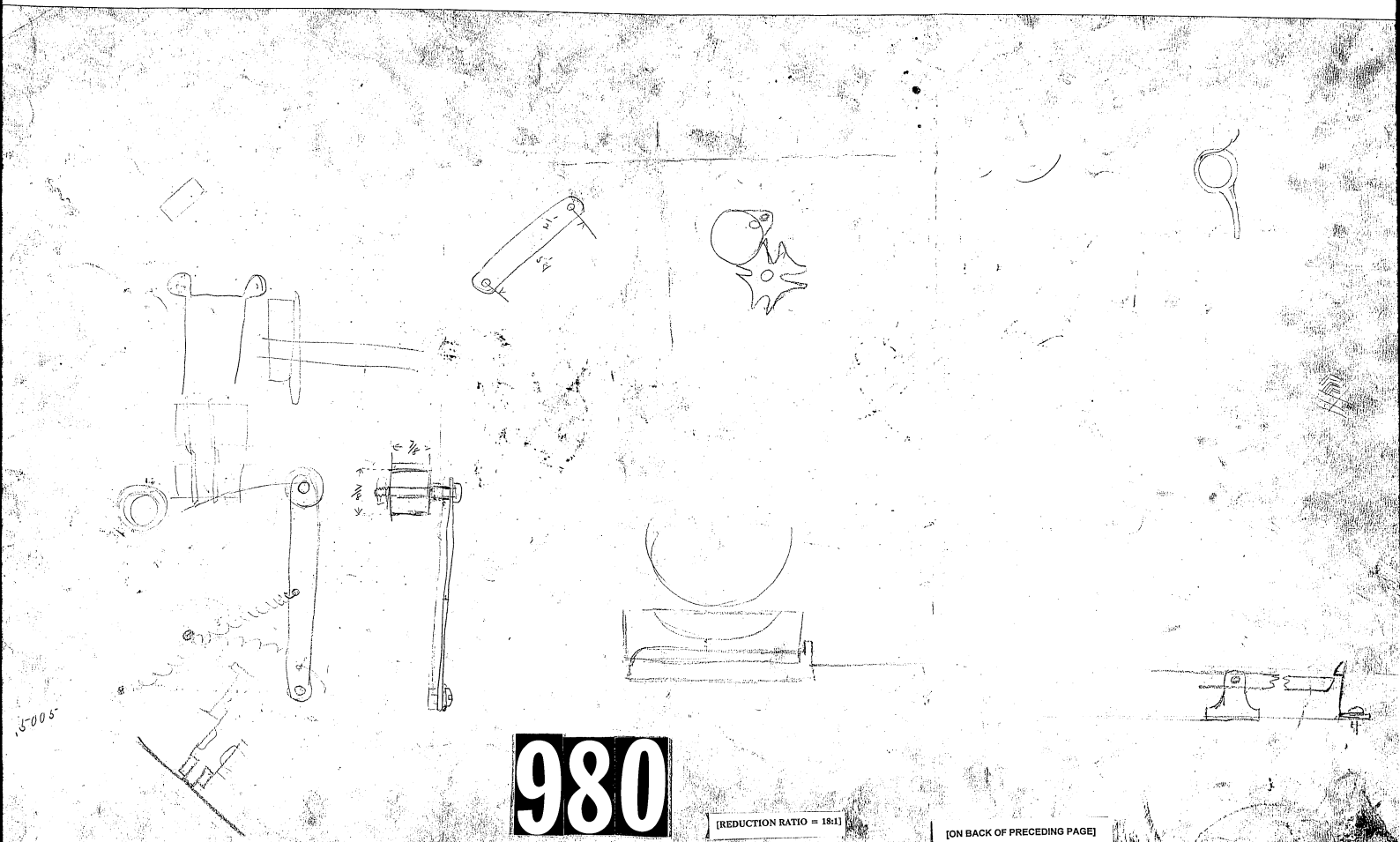

980

[REDUCTION RATIO = 18:1]

[ON BACK OF PRECEDING PAGE]

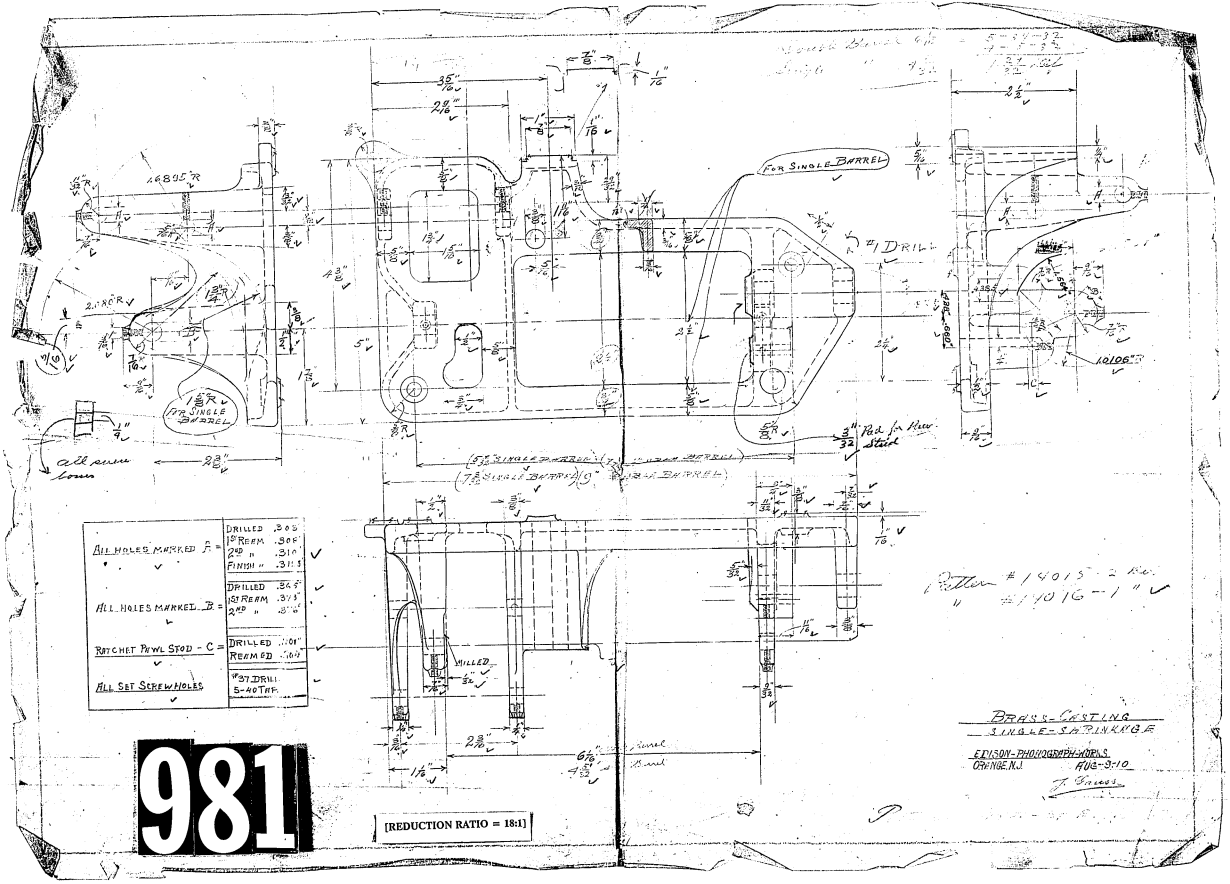

981

[REDUCTION RATIO = 18:1]

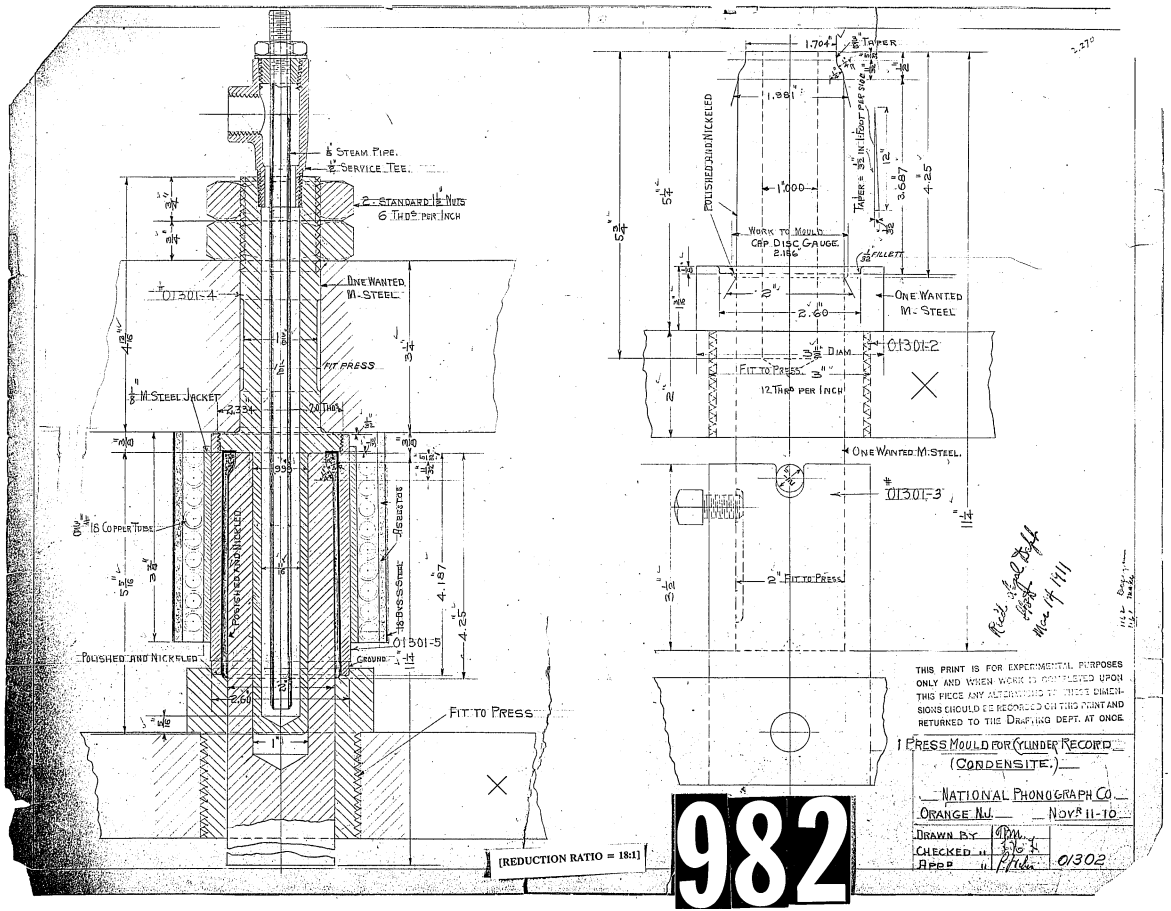
1/8" Steam Pipe.
1/2" Service Tee.
2 - Standard 1/2" Nuts
6 Thds per Inch
One Wanted M. Steel.
01301-4
Fit Press
M. Steel Jacket
2.334
20 Thds
1/16" 16 Copper Tube
Polished and Nickeled
Regulator
16 Brass Stock
01301-5
Ground
Polished and Nickeled
Fit to Press
1.704
1/8" Taper
1.981
Polished and Nickeled
1.000
Taper = 3/32 in. 1 Foot Pipe Size
3.687
4.25
Work to Mould Cap Disc Gauge. 2.156
1/8" Fillett
2.60
One Wanted M. Steel
01301-2
Fit to Press
12 Thds per Inch
One Wanted M. Steel.
01301-3
Fit to Press
Rect. Final Draft Approved Nov 17 1911
THIS PRINT IS FOR EXPERIMENTAL PURPOSES ONLY AND WHEN WORK IS COMPLETED UPON THIS PIECE ANY ALTERATIONS TO THESE DIMENSIONS SHOULD BE RECORDED ON THIS PRINT AND RETURNED TO THE DRAFTING DEPT. AT ONCE.
1 Press Mould for Cylinder Record (Condensite.)
National Phonograph Co.
Orange N.J. Nov. 11-10
Drawn by
Checked "
Appr "
01302
[REDUCTION RATIO = 18:1]
982

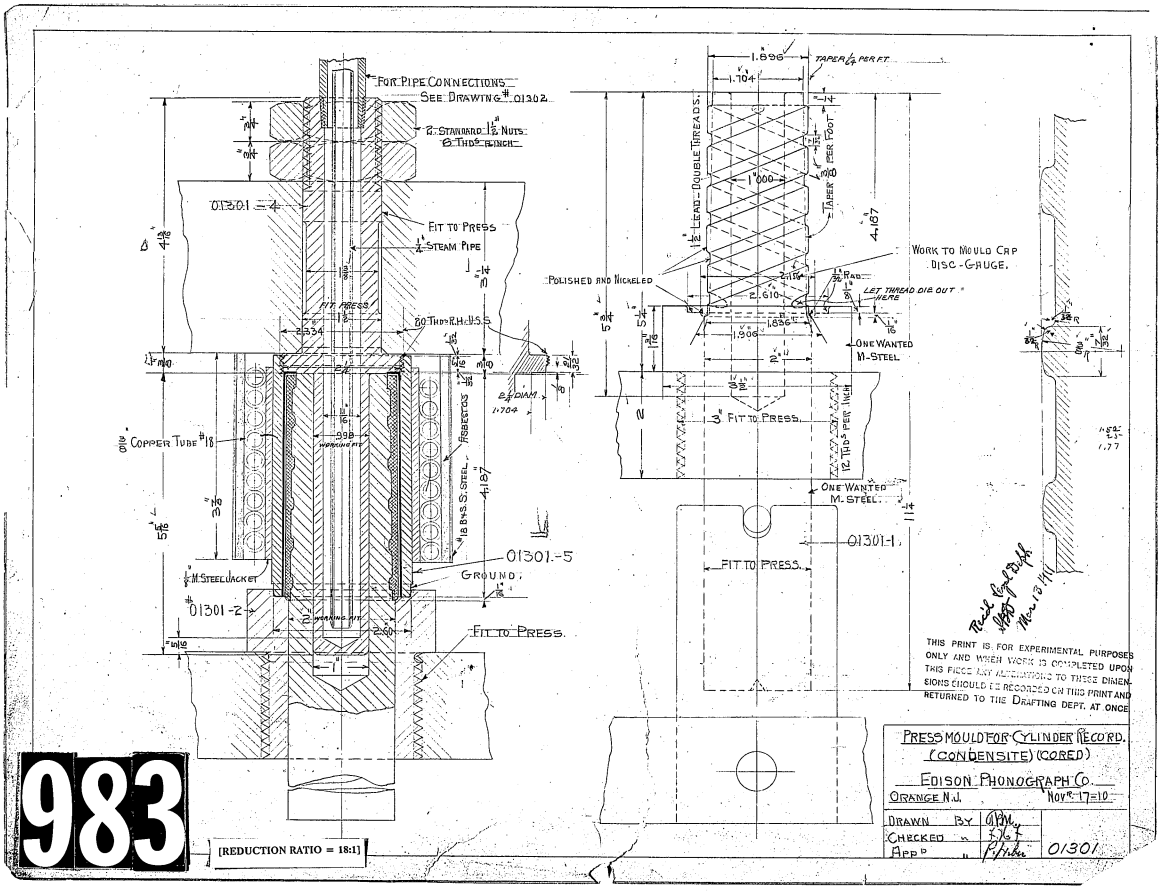
FOR PIPE CONNECTIONS SEE DRAWING # 01302.
2 STANDARD 1½" NUTS 8 THDS. PER INCH
01301-4
FIT TO PRESS
½" STEAM PIPE
FIT PRESS.
20 THDS R.H. U.S.S.
ASBESTOS
18 B.W.G. S. STEEL
COPPER TUBE # 18
WORKING FIT
01301-5
GROUND.
½" M. STEEL JACKET
01301-2
WORKING FIT
FIT TO PRESS.
1.898
TAPER 1/4 PER FT.
1.704
1½" LEAD - DOUBLE THREADS.
1.000
8 THDS PER FOOT
4.187
WORK TO MOULD CAP DISC-GAUGE.
POLISHED AND NICKELED
2.610
LET THREAD DIE OUT HERE
1.856
1.906
ONE WANTED M-STEEL.
3" FIT TO PRESS.
12 THDS PER INCH
ONE WANTED M. STEEL.
01301-1
FIT TO PRESS.
1.77
THIS PRINT IS FOR EXPERIMENTAL PURPOSES ONLY AND WHEN WORK IS COMPLETED UPON THIS PIECE ANY ALTERATIONS TO THESE DIMENSIONS SHOULD BE RECORDED ON THIS PRINT AND RETURNED TO THE DRAFTING DEPT. AT ONCE.
PRESS MOULD FOR CYLINDER RECORD. (CONDENSITE) (CORED)
EDISON PHONOGRAPH CO.
ORANGE N.J.
NOV. 17-10
DRAWN BY
CHECKED "
APP'D "
01301
[REDUCTION RATIO = 18:1]

983